19-1847; Rev 3; 5/09

1µA, 2Mbps, Low-Voltage Level Translators in SC70 and µDFN

General Description

The MAX3370/MAX3371 logic-level translators are ideal for applications interfacing low-voltage devices to other logic levels. Externally applied voltages set the logic levels of the MAX3370/MAX3371. The devices accept V_{CC} from +2.5V to +5.5V and V_L from +1.6V to +5.5V, allowing data transfer between low-voltage ASICs and higher voltage devices. The MAX3371 features a shutdown mode that reduces supply current to < 1µA and puts the I/O pins in a high-impedance state.

The MAX3370/MAX3371 are bidirectional level shifters, allowing data transfer from the V_{CC} side to the V_L side and from the V_L side to the V_{CC} side. Both devices operate at speeds up to 2Mbps with an active driver and up to 500kbps with an open-drain driver.

The MAX3370/MAX3371 are available in space-saving µDFN (1mm x 1.5mm) and SC70 packages.

Applications

Cell Phone Cradles

Cell Phone Hands-Free Kits

Portable POS Systems

Portable Communication Devices

Smart Card Readers

SPI™, MICROWIRE™, and I²C Level Translation

Low-Voltage ASIC Level Translation

RS-232-Compatible Translation

SPI is a trademark of Motorola, Inc.

MICROWIRE is a trademark of National Semiconductor Corp.

Typical Operating Circuit

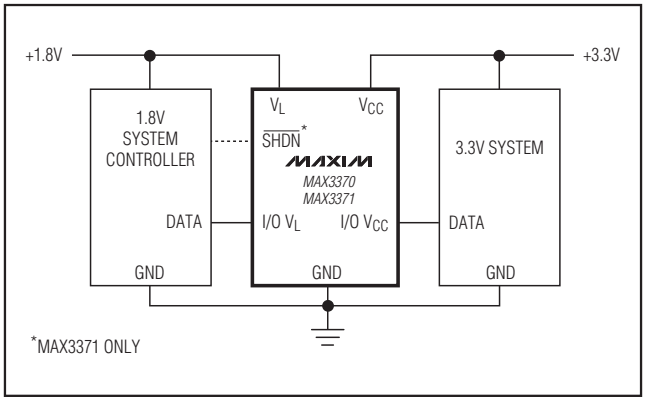

Features

- **Allow Bidirectional Level Translation**
- **Miniature µDFN (1mm x 1.5mm) and SC70 Packages**
- **Operational Down to 1.6V**
- **Low Quiescent Current (< 100µA)**
- **Ultra-Low (< 1µA) Shutdown Supply Current (MAX3371)**
- **Three-State Outputs in Shutdown (MAX3371)**
- **2Mbps (10pF Load) Push-Pull Driving**
- **1Mbps (50pF Load) Push-Pull Driving**
- **500kbps (30pF Load) Open-Drain Driving**

Ordering Information

PART*	PIN-PACKAGE	$\overline{SHDN}$	TOP MARK
MAX3370EXK+T	5 SC70	NO	ABV
MAX3370ELT+T	6 µDFN	NO	KX
MAX3371ELT+T	6 µDFN	YES	KY
MAX3371EXT+T	6 SC70	YES	AAO

**All devices are specified over the -40°C to +85°C operating temperature range.*

+Denotes lead(Pb)-free/RoHS-compliant package.

Pin Configurations

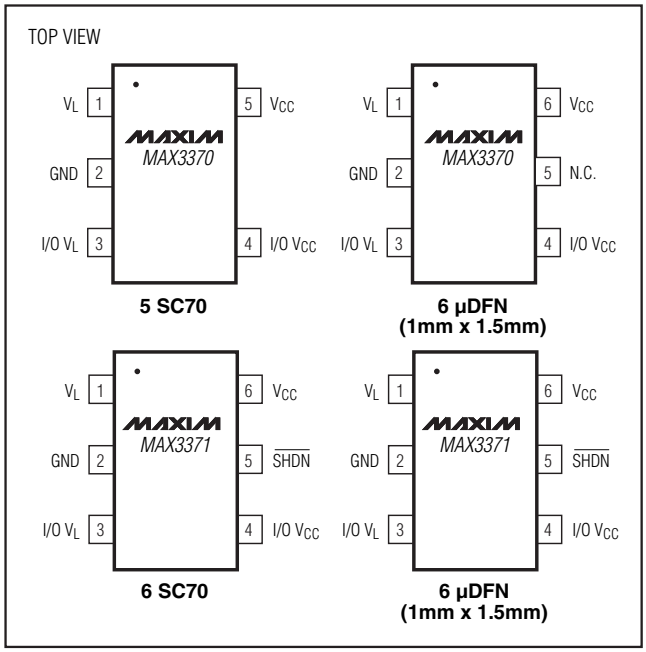

For pricing, delivery, and ordering information, please contact Maxim Direct at 1-888-629-4642, or visit Maxim's website at www.maxim-ic.com.

1µA, 2Mbps, Low-Voltage Level Translators in SC70 and µDFN

ABSOLUTE MAXIMUM RATINGS

V_{CC} to GND .....-0.3V to +7V
$\overline{SHDN}$ to GND .....-0.3V to (V_L + 0.3V)
I/O V_L to GND.....-0.3V to (V_L + 0.3V)
V_L, I/O V_{CC} to GND .....-0.3V to (V_{CC} + 0.3V)
Short-Circuit Duration: I/O V_L, I/O V_{CC} to GND.....Continuous

Continuous Power Dissipation (T_A = +70°C)
SC70 (derate 3.1mW/°C above +70°C) 245mW
6-Pin µDFN (derate 2.1mW/°C above +70°C) 168mW
Operating Temperature Range .....-40°C to +85°C
Storage Temperature Range .....-65°C to +150°C
Lead Temperature (soldering, 10s) .....+300°C

Stresses beyond those listed under "Absolute Maximum Ratings" may cause permanent damage to the device. These are stress ratings only, and functional operation of the device at these or any other conditions beyond those indicated in the operational sections of the specifications is not implied. Exposure to absolute maximum rating conditions for extended periods may affect device reliability.

ELECTRICAL CHARACTERISTICS

(V_{CC} = +2.5V to +5.5V, V_L = +1.6V to +5.5V (Note 1), GND = 0; I/O V_L, I/O V_{CC} unconnected; T_A = -40°C to +85°C, unless otherwise noted. Typical values are at T_A = +25°C.) (Note 2)

PARAMETER	SYMBOL	CONDITIONS	MIN	TYP	MAX	UNITS
POWER SUPPLIES						
V_L Supply Range	V_L	(Note 1)	1.6		5.5	V
V_{CC} Supply Range	V_{CC}		2.5		5.5	V
Supply Current from V_{CC}	I_{QVCC}			70	100	µA
Supply Current from V_L	I_{QVL}			5	100	µA
V_{CC} Shutdown Supply Current		$\overline{SHDN}$ = GND, T_A = +25°C, MAX3371		0.03	1	µA
V_L Shutdown Supply Current		$\overline{SHDN}$ = GND, T_A = +25°C, MAX3371		0.03	1	µA
Three-State Output Leakage Current		I/O V_L, I/O V_{CC}; $\overline{SHDN}$ = GND, T_A = +25°C, MAX3371		0.02	1	µA
LOGIC LEVEL THRESHOLDS						
I/O V_L Input-Voltage High Threshold	V_{IHL}				V_L - 0.2	V
I/O V_L Input-Voltage Low Threshold	V_{ILL}		0.15			V
I/O V_{CC} Input-Voltage High Threshold	V_{IHC}				V_{CC} - 0.4	V
I/O V_{CC} Input-Voltage Low Threshold	V_{ILC}		0.2			V
I/O V_L Output-Voltage High	V_{OHL}	I/O V_L sink current = 20µA, I/O $V_{CC} \geq V_{CC}$ - 0.4V (Note 3)	2/3 × V_L			V
I/O V_L Output-Voltage Low	V_{OLL}	I/O V_L sink current = 1mA, I/O $V_{CC} \leq$ 0.2V (Note 3)			0.4	V
I/O V_{CC} Output-Voltage High	V_{OHC}	I/O V_{CC} source current = 20µA, I/O $V_L \geq V_L$ - 0.2V (Note 3)	2/3 × V_{CC}			V
I/O V_{CC} Output-Voltage Low	V_{OLC}	I/O V_{CC} sink current = 1mA, I/O $V_L \leq$ 0.15V (Note 3)			0.4	V
$\overline{SHDN}$ Input-Voltage High	$V_{IH-SHDN}$		2/3 × V_L			V
$\overline{SHDN}$ Input-Voltage Low	$V_{IL-SHDN}$	$V_L \geq$ +1.8V			0.4	V
		$V_L \geq$ +1.6V			0.2	

ELECTRICAL CHARACTERISTICS (continued)

(V_{CC} = +2.5V to +5.5V, V_L = +1.6V to +5.5V (Note 1), GND = 0; I/O V_L, I/O V_{CC} unconnected; T_A = -40°C to +85°C, unless otherwise noted. Typical values are at T_A = +25°C.) (Note 2)

PARAMETER	SYMBOL	CONDITIONS	MIN	TYP	MAX	UNITS
TIMING CHARACTERISTICS (R_{LOAD} = 1MΩ, V_{CC} = +2.5V, V_L = +1.6V, I/O test signal rail-to-rail, unless otherwise noted, Figure 1) (Note 3)						
I/O V_{CC} Rise Time (Note 4)	t_{RVCC}	C_{LOAD} = 10pF, data rate = 2Mbps (Note 5)			100	ns
		C_{LOAD} = 50pF, data rate = 1Mbps			200	
		C_{LOAD} = 30pF, data rate = 500kbps, open-drain drive			400	
I/O V_{CC} Fall Time (Note 4)	t_{FVCC}	C_{LOAD} = 10pF, data rate = 2Mbps (Note 5)			50	ns
		C_{LOAD} = 50pF, data rate = 1Mbps			200	
		C_{LOAD} = 30pF, data rate = 500kbps, open-drain drive			400	
I/O V_L Rise Time (Note 4)	t_{RVL}	C_{LOAD} = 10pF, data rate = 2Mbps (Note 5)			100	ns
		C_{LOAD} = 50pF, data rate = 1Mbps			200	
		C_{LOAD} = 30pF, data rate = 500kbps, open-drain drive			400	
I/O V_L Fall Time (Note 4)	t_{FVL}	C_{LOAD} = 10pF, data rate = 2Mbps (Note 5)			50	ns
		C_{LOAD} = 50pF, data rate = 1Mbps			200	
		C_{LOAD} = 30pF, data rate = 500kbps, open-drain drive			400	
HIGH-to-LOW Transition Propagation Delay (Driving I/O V_L)	$t_{PD-VCC-HL}$	C_{LOAD} = 10pF, data rate = 2Mbps (Note 5)			50	ns
		C_{LOAD} = 50pF, data rate = 1Mbps			200	
		C_{LOAD} = 30pF, data rate = 500kbps, open-drain drive			400	
LOW-to-HIGH Transition Propagation Delay (Driving I/O V_L)	$t_{PD-VCC-LH}$	C_{LOAD} = 10pF, data rate = 2Mbps (Note 5)			200	ns
		C_{LOAD} = 50pF, data rate = 1Mbps			400	
		C_{LOAD} = 30pF, data rate = 500kbps, open-drain drive			800	
HIGH-to-LOW Transition Propagation Delay (Driving I/O V_{CC})	$t_{PD-VL-HL}$	C_{LOAD} = 10pF, data rate = 2Mbps (Note 5)			50	ns
		C_{LOAD} = 50pF, data rate = 1Mbps			200	
		C_{LOAD} = 30pF, data rate = 500kbps, open-drain drive			400	
LOW-to-HIGH Transition Propagation Delay (Driving I/O V_{CC})	$t_{PD-VL-LH}$	C_{LOAD} = 10pF, data rate = 2Mbps (Note 5)			200	ns
		C_{LOAD} = 50pF, data rate = 1Mbps			400	
		C_{LOAD} = 30pF, data rate = 500kbps, open-drain drive			800	
HIGH-to-LOW Transition Propagation Delay Device-to-Device Skew (Driving I/O V_L)		C_{LOAD} = 10pF, data rate = 2Mbps (Note 3)		2		ns
		C_{LOAD} = 50pF, data rate = 1Mbps		4		
		C_{LOAD} = 30pF, data rate = 500kbps, open-drain drive		5		

1µA, 2Mbps, Low-Voltage Level Translators in SC70 and µDFN

ELECTRICAL CHARACTERISTICS (continued)

(V_{CC} = +2.5V to +5.5V, V_L = +1.6V to +5.5V (Note 1), GND = 0; I/O V_L, I/O V_{CC} unconnected; T_A = -40°C to +85°C, unless otherwise noted. Typical values are at T_A = +25°C.) (Note 2)

PARAMETER	SYMBOL	CONDITIONS	MIN	TYP	MAX	UNITS
LOW-to-HIGH Transition Propagation Delay Device-to-Device Skew (Driving I/O V_L)		C_{LOAD} = 10pF, data rate = 2Mbps (Note 3)		5		ns
		C_{LOAD} = 50pF, data rate = 1Mbps		8		
		C_{LOAD} = 30pF, data rate = 500kbps, open-drain drive		80		
HIGH-to-LOW Transition Propagation Delay Device-to-Device Skew (Driving I/O V_{CC})		C_{LOAD} = 10pF, data rate = 2Mbps (Note 3)		2		ns
		C_{LOAD} = 50pF, data rate = 1Mbps		4		
		C_{LOAD} = 30pF, data rate = 500kbps, open-drain drive		5		
LOW-to-HIGH Transition Propagation Delay Device-to-Device Skew (Driving I/O V_{CC})		C_{LOAD} = 10pF, data rate = 2Mbps (Note 3)		7		ns
		C_{LOAD} = 50pF, data rate = 1Mbps		8		
		C_{LOAD} = 30pF, data rate = 500kbps, open-drain drive		50		
Maximum Data Rate		C_{LOAD} = 10pF (Note 5)	2	3		Mbps
		C_{LOAD} = 50pF	1	2		
		C_{LOAD} = 30pF, open-drain drive	0.5	1		

Note 1: V_L must always be less than or equal to V_{CC}.
Note 2: All units are 100% production tested at T_A = +25°C. Limits over the operating temperature range are guaranteed by design and not production tested.
Note 3: Tested only at worst case: V_{CC} = +2.5V, V_L = +1.6V.
Note 4: 10% to 90%.
Note 5: Guaranteed by correlation to C_{LOAD} = 50pF.

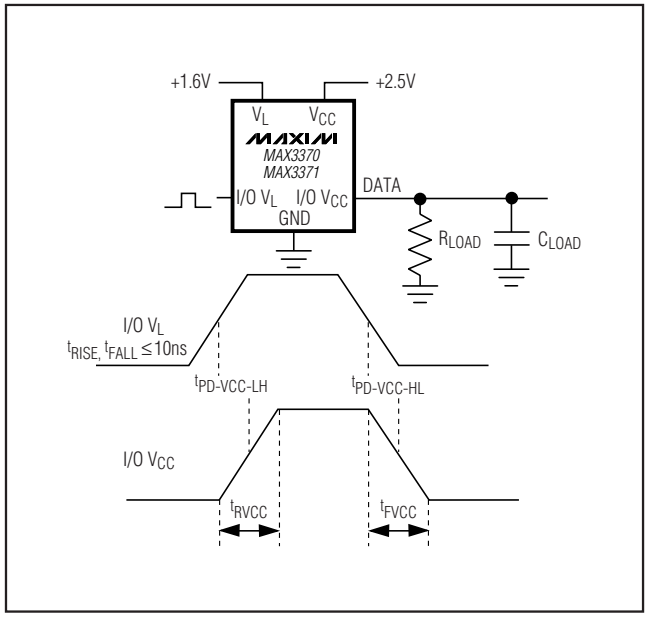

Figure 1a. Rail-to-Rail Driving I/O V_L

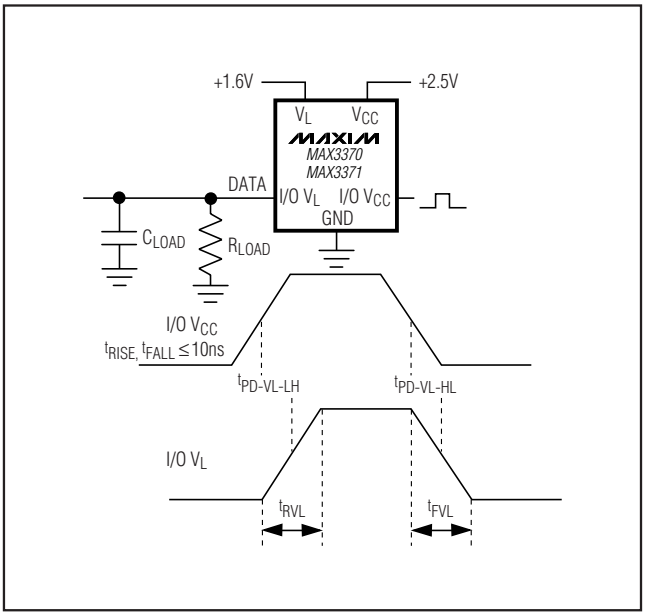

Figure 1b. Rail-to-Rail Driving I/O V_{CC}

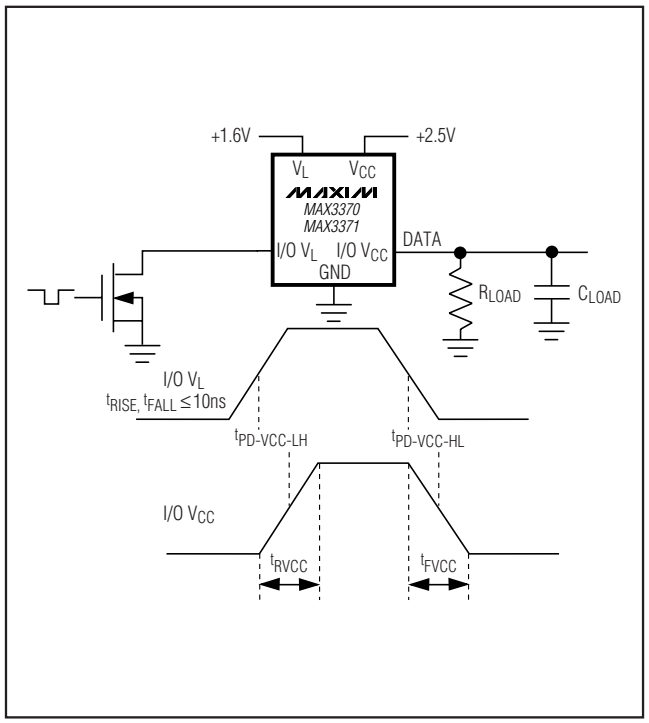

Figure 1c. Open-Drain Driving I/O V_L

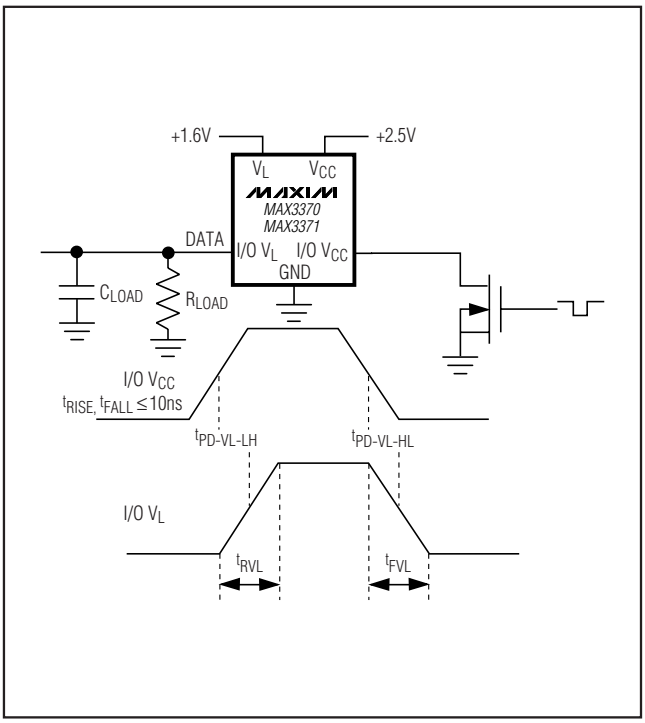

Figure 1d. Open-Drain Driving I/O V_{CC}

1µA, 2Mbps, Low-Voltage Level Translators in SC70 and µDFN

Typical Operating Characteristics

(Driving I/O V_L rail-to-rail, R_L = 1MΩ, T_A = +25°C, unless otherwise noted.)

V_L SUPPLY CURRENT vs. POWER-SUPPLY VOLTAGE

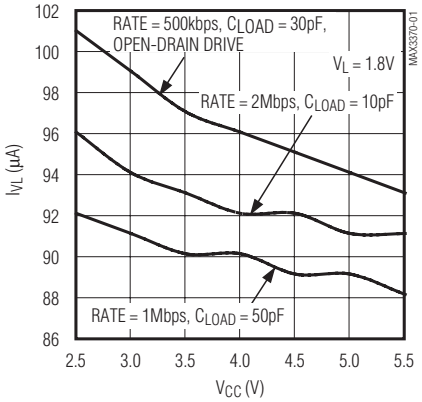

V_{CC} SUPPLY CURRENT vs. POWER-SUPPLY VOLTAGE

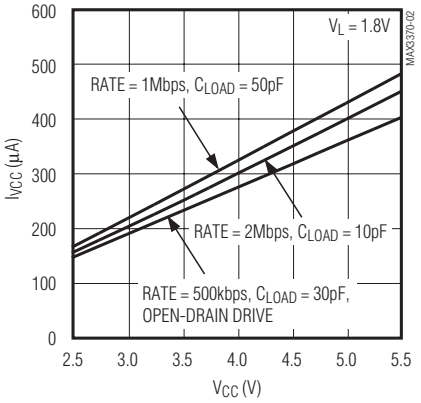

V_L SUPPLY CURRENT vs. TEMPERATURE

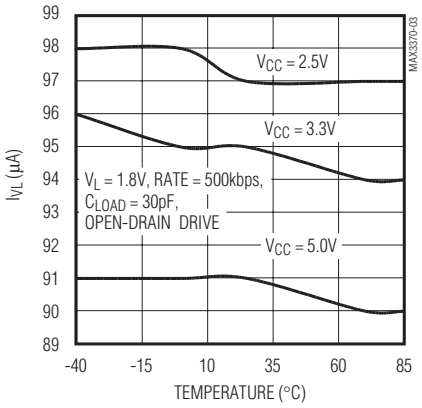

V_{CC} SUPPLY CURRENT vs. TEMPERATURE

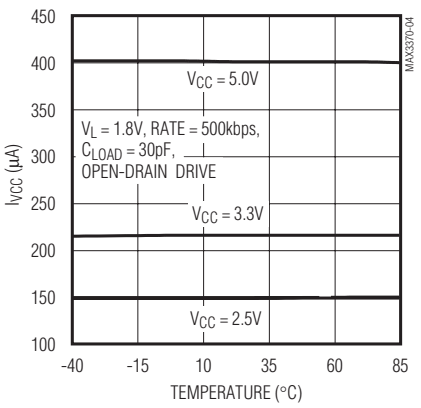

V_L SUPPLY CURRENT vs. LOAD CAPACITANCE

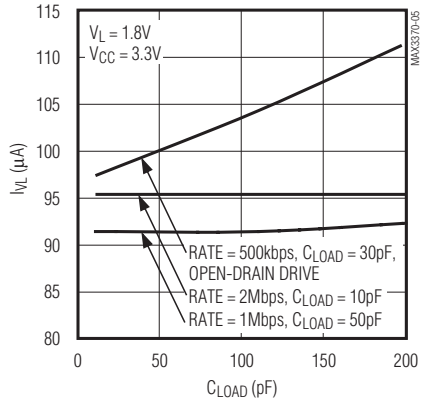

V_{CC} SUPPLY CURRENT vs. LOAD CAPACITANCE

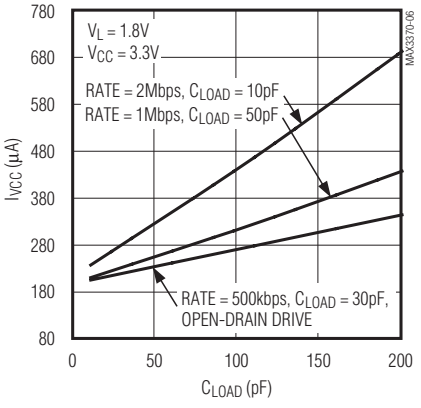

Typical Operating Characteristics (continued)

(Driving I/O V_L rail-to-rail, R_L = 1MΩ, T_A = +25°C, unless otherwise noted.)

PROPAGATION DELAY vs. LOAD CAPACITANCE (DRIVING I/O V_L)

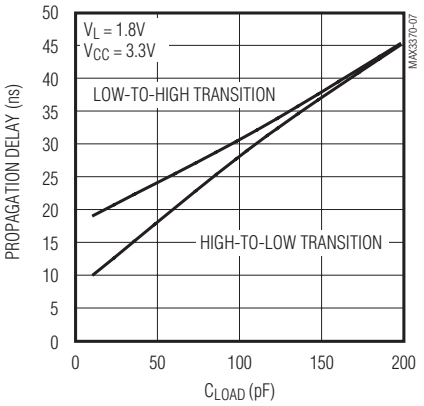

PROPAGATION DELAY vs. LOAD CAPACITANCE (DRIVING I/O V_{CC})

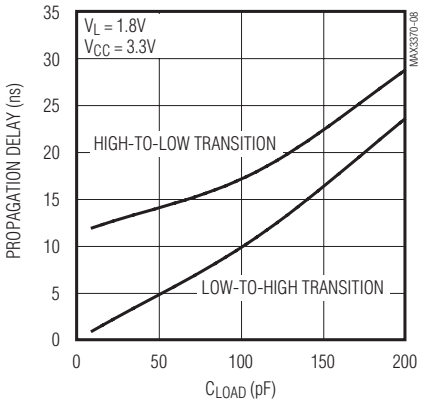

RAIL-TO-RAIL DRIVING (RATE = 2Mbps, C_{LOAD} = 10pF, V_{CC} = 3.3V, V_L = 1.8V)

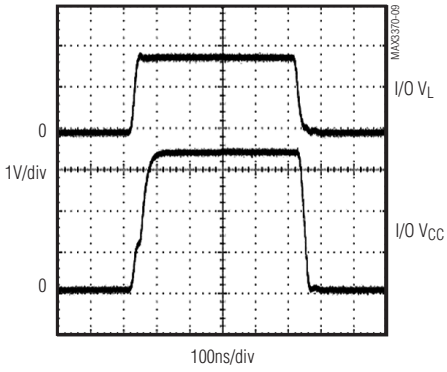

RAIL-TO-RAIL DRIVING (RATE = 1Mbps, C_{LOAD} = 50pF, V_{CC} = 3.3V, V_L = 1.8V)

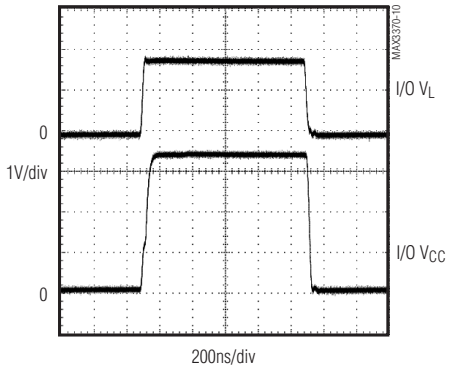

OPEN-DRAIN DRIVING (RATE = 500kbps, C_{LOAD} = 30pF, V_{CC} = 3.3V, V_L = 1.8V)

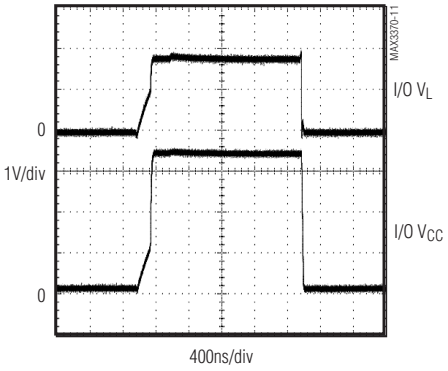

OPEN-DRAIN DRIVING (RATE = 500kbps, C_{LOAD} = 30pF, V_{CC} = 5V, V_L = 2.5V)

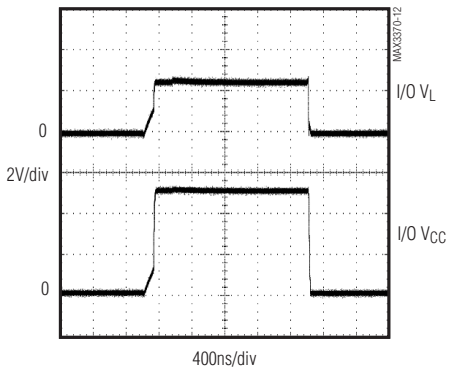

MAX3371 EXITING SHUTDOWN

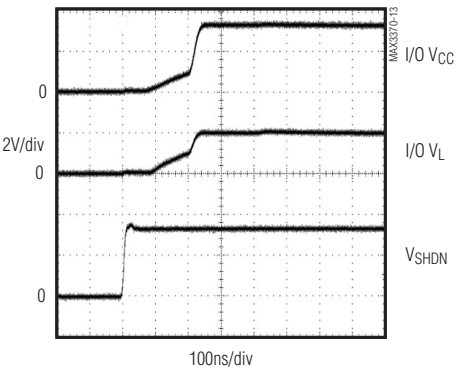

1µA, 2Mbps, Low-Voltage Level Translators in SC70 and µDFN

Pin Description

PIN			NAME	FUNCTION
MAX3370		MAX3371 (SC70-6 AND µDFN-6)		
(SC70-5)	(µDFN-6)			
1	1	1	V_L	Logic Supply Voltage
2	2	2	GND	Ground
3	3	3	I/O V_L	Input/Output Referred to V_L
4	4	4	I/O V_{CC}	Input/Output Referred to V_{CC}
5	6	6	V_{CC}	Power-Supply Voltage
—	—	5	$\overline{SHDN}$	Shutdown. A high turns on the device. A low shuts down the device. I/O V_{CC} and I/O V_L are high impedance in shutdown.
—	5	—	N.C.	No Connection

Detailed Description

The MAX3370/MAX3371 provide the necessary level translation to allow data transfer in a multivoltage system. These devices transmit data between an I/O pin referenced to V_{CC} and an I/O pin referenced to V_L. The V_{CC} supply voltage range is from +2.5V to +5.5V, and the V_L supply voltage range is between +1.6V and +5.5V. The MAX3371 features a shutdown mode in which I/O V_{CC} and I/O V_L are placed in a high-impedance state and supply current drops to 1µA.

The MAX3370/MAX3371 are bidirectional level shifters allowing data transfer from the V_{CC} side to the V_L side, and from the V_L side to the V_{CC} side. Both devices operate at speeds up to 2Mbps with an active driver and up to 500kbps with an open-drain driver.

Level Translation

The MAX3370/MAX3371 provide bidirectional level translation between I/O pins referred to V_{CC} and V_L. I/O V_{CC} and I/O V_L are internally pulled up to their respective power-supply rails through 10kΩ resistors. V_{CC} must be between +2.5V and +5.5V, and V_L must be between +1.6V and +5.5V. For proper operation, V_L can not exceed V_{CC}.

The MAX3370/MAX3371 can operate at data rates up to 2Mbps when driven by an active (push-pull) driver with a 10pF load, 1Mbps when driven by an active driver with a 50pF load, or 500kbps when driven by an open-drain driver with a 30pF load. The internal pullups allow these devices to be driven by open-drain drivers.

Functional Diagram

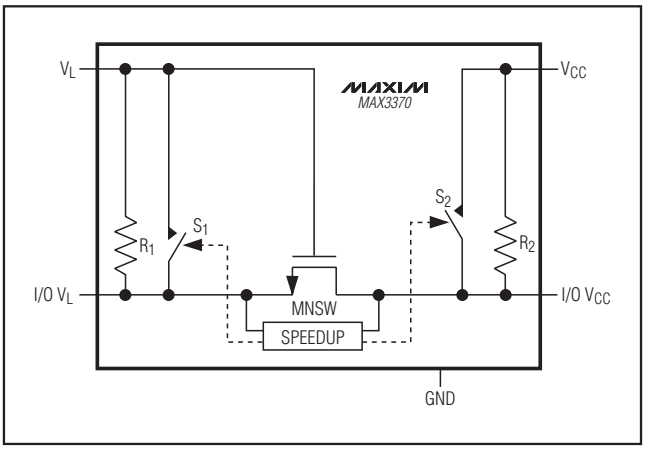

MAX3371 Shutdown Mode

The MAX3371 enters a low-power shutdown mode when $\overline{SHDN}$ is driven low. Connect $\overline{SHDN}$ to V_L or drive high for normal operation. Activating shutdown mode disconnects the internal 10kΩ pullup resistors on I/O V_{CC} and I/O V_L. As a result, the supply current decreases to < 1µA, and the I/O lines are high impedance. The high impedance I/O lines in shutdown allow use in a multidrop network. When in shutdown, I/O V_L can be driven to V_L and I/O V_{CC} can be driven to V_{CC}.

Speed-Up

The speed-up circuit is a one-shot generator that helps the rise time of the output waveform in the low-to-high transition. When triggered, switches S_1 and S_2 turn on for 320ns to pull up I/O V_L and I/O V_{CC}. This greatly reduces the rise time and propagation delay for the low-to-high transition as well as improves the duty cycle (closer to 50% for an ideal square-wave input). See the scope plots in the *Typical Operating Characteristics* for the speed-up circuitry in operation.

Applications Information

Power-Supply Decoupling

To reduce ripple and the chance of transmitting incorrect data, decouple V_{CC} and V_L to ground with a 0.1µF capacitor as close to the device as possible.

I²C Level Translation

The MAX3370/MAX3371 are ideal for level translation between a low-voltage ASIC and an I²C device. The devices' bidirectional natures allow their use in the data line of I²C communications. A typical application is interfacing a low-voltage microprocessor to a 3V or 5V D/A converter, such as the MAX517.

The I/O lines on the MAX3370/MAX3371 are bidirectional, can be level-shifted up to +5.5V, and contain internal 10kΩ pullup resistors to allow open-drain driving (see the *Typical Operating Circuit*).

Push-Pull vs. Open-Drain Driving

The MAX3370/MAX3371 I/O pins can be driven by a push-pull or open-drain device. When using a push-pull driver, the MAX3370/MAX3371 operate up to 2Mbps with a 10pF load or 1Mbps with a 50pF load. The internal pullup resistors on the I/O pins allow use with open-drain devices. The MAX3370/MAX3371 operate up to 500kbps with a 30pF load when driven by an open-drain device.

Data rates higher than those listed in the *Electrical Characteristics* table can be achieved. The maximum data rate is limited to 3Mbps by the speed-up circuitry.

Unidirectional vs. Bidirectional Level Translator

The MAX3370/MAX3371 may also be used to translate unidirectional signals without signal inversion. The devices provide the smallest solution (SC70 package) for unidirectional level translation without inversion.

Chip Information

PROCESS: BiCMOS

Package Information

For the latest package outline information and land patterns, go to **www.maxim-ic.com/packages**.

PACKAGE TYPE	PACKAGE CODE	DOCUMENT NO.
5 SC70	X5+1	21-0076
6 SC70	X6SN+1	21-0077
6 µDFN	L611+2	21-0147

1µA, 2Mbps, Low-Voltage Level Translators in SC70 and µDFN

Revision History

REVISION NUMBER	REVISION DATE	DESCRIPTION	PAGES CHANGED
0	10/00	Initial release	—
3	5/09	Updated *Ordering Information*, style edits.	1, 5, 8, 9, 11

Maxim cannot assume responsibility for use of any circuitry other than circuitry entirely embodied in a Maxim product. No circuit patent licenses are implied. Maxim reserves the right to change the circuitry and specifications without notice at any time.

© 2009 Maxim Integrated Products Maxim is a registered trademark of Maxim Integrated Products, Inc.